**CHEMICAL ENGINEERING TRANSACTIONS** Volume 24, 2011
Editor Sauro Pierucci
Copyright © 2011, AIDIC Servizi S.r.l., ISBN 978-88-95608-15-0 ISSN 1974-9791
DOI: 10.3303/CET1124133



# Modeling and Optimization of Multistage Electrodialysis Systems for Water Desalination

Adriana N. Vargas*, Roberto Guardani

Univ. São Paulo, Chemical Engineering Department
Av. Luciano Gualberto 380 Tv 3, 05508-900 São Paulo-SP, Brazil
adriana@mail.pqi.ep.usp.br

An optimization study was carried out for an electrodialysis system (ED) operating continuously in stages, based on material balances for the species in each single cell of a generic stage, applied to the separation of NaCl, KCl or $Na_2SO_4$ from water solutions. The effect of process variables affecting the investment and operating costs, expressed as membrane and electric energy costs, respectively, is considered. The results indicate that $Na_2SO_4$ removal is more expensive than NaCl or KCl due to the divalent ion effect. It is possible to find optimal solutions for minimizing total costs under different scenarios by changing design and operating variables such as cell thickness and recycle ratio.

## 1. Introduction

Electrodialysis (ED) systems have found many industrial applications since over fifty years, in order to separate ionic species through perm-selective membranes, by means of an externally applied electrical potential gradient (Strathmann, 2004). ED systems are considerably more efficient than other technologies due to the larger transfer rates achievable, but the desalination costs are affected by electric energy costs. Thus, for each specific situation, the minimum-cost ED design involves finding optimal values of membrane area and electric energy for each set of process variables (Vargas, 2010).
This study presents a mathematical model based on Lee et al. (2002), used in simulations to evaluate the desalination costs for water containing NaCl, KCl or $Na_2SO_4$. A direct search algorithm was used to estimate optimal values of design variables that minimize the investment and operational costs of an ED plant.

## 2. Mathematical Model

The mass transfer equations were implemented in an ED system that operates continuously in stages with recycle in the diluted compartment. For a differential element in stage *j*, the model is based on a cation balance in the diluted single cell shown in Fig. 1. Mass transfer in the single cell is a result of fluxes caused by migration of cations and anions in the *z*-direction and convection of the solution in the *x*-direction from the entrance to the exit.

Please cite this article as: Vargas A. and Guardani R., 2011, Modeling and optimization of multistage electrodialysis systems for water desalination, Chemical Engineering Transactions, 24, 793-798
DOI: 10.3303/CET1124133

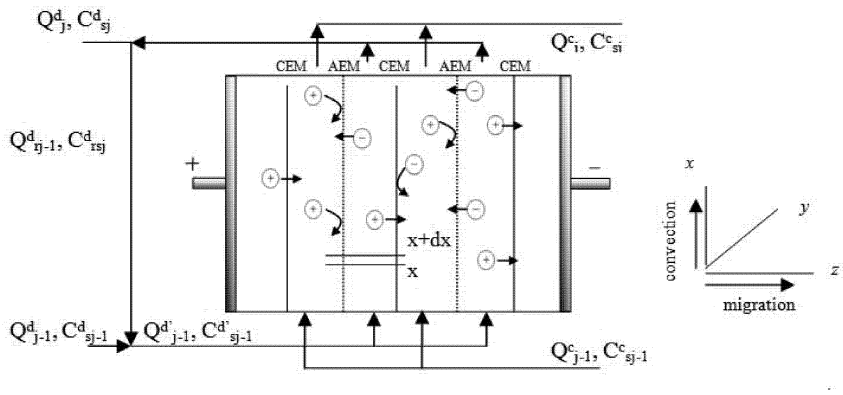


*Fig 1: Scheme of a generic stage of an electrodialysis system operating continuously.*

The correlation between the concentration difference from entrance to exit along the length of stage *j* and the migration and convection fluxes is described by Eq. 1 (Vargas, 2010):

$$d^{\Delta}C_{sj} = \frac{\xi E_{cell} w}{Z_c v_c \left[\frac{h}{\Lambda_e^c\left[{}^{\Delta}C_{sj} + C_s^{fc}\right]} + \frac{h}{\Lambda_e^d\left[C_s^{fd} - {}^{\Delta}C_{sj}\right]} + R^{am} + R^{cm}\right] FQ_{j-1}^{d'}} dx \tag{1}$$

With the boundary conditions:

$$x = 0; \quad {}^{\Delta}C_{sj} = 0 \tag{2}$$

$$x = L_s; \quad {}^{\Delta}C_{sj} = C_{sj-1}^{d'} - C_{sj}^{d} \tag{3}$$

Here, $E_{cell}$ is the electrical potential applied in each cell pair, $w$ is the cell width and $h$ is the cell thickness, $R^{am}$ and $R^{cm}$ are the anionic and cationic membrane resistances, respectively, $F$ is the Faraday constant, $Q^{d'}_{j-1}$ is the flow rate across the single cell in stage $j$, $Z_c$ is the valence, $v_c$ is a stoichiometric constant, $\Lambda_e$ is the specific conductance, ${}^{\Delta}C_{sj}$ is the concentration difference between the feed and any point along stage $j$, $C^{d'}_{sj-1}$ and $C^{d}_{sj}$ are the inlet and outlet diluted concentrations in stage $j$, $C^{fd}_s$ and $C^{fc}_s$ are the feed concentrations of the diluted and concentrated streams. $\Lambda_e$ can be calculated as a function of the ionic strength $I_m$. (Vargas, 2010):

$$\Lambda_e^k = \Lambda_\infty \frac{A\Lambda_\infty}{1 + Ba^0\left(I_m^k\right)^{1/2}} + C\frac{\left(I_m^k\right)^{1/2}}{1 + B\overset{0}{a}\left(I_m^k\right)^{1/2}}; \quad k=c \text{ or } d \tag{4}$$

Where A, B and C are coefficients presented by Horvath (1985) and estimated as described by Vargas (2010), $a^0$ is the approach distance between molecules and $\Lambda_\infty$ is the limiting molar conductivity.

The inlet diluted concentration is calculated through a mass balance in the mixing point as a function of the recycle ratio *Rec*:

$$C_{sj-1}^{d'} = \frac{(1-Rec)Q_{j-1}^{d'}C_{sj-1}^{d} + Rec\,Q_{j-1}^{d'}C_{srj}^{d}}{Q_{j-1}^{d'}} \tag{5}$$

Where:

$$C_{srj}^{d} = C_{sj}^{d} \tag{6}$$

Assuming constant density:

$$Q_{rj}^{d} = Q_{j-1}^{d'} - Q_{j-1}^{d} \tag{7}$$

$$Rec = \frac{Q_{rj}}{Q_{j-1}^{d'}} \tag{8}$$

The flow rate across the single cell in stage $j$ is calculated from the geometrical membrane characteristics:

$$Q_{j-1}^{d'} = \frac{hwu\alpha}{\beta} \tag{9}$$

Here $u$ is the fluid velocity, $\alpha$ and $\beta$ are safety factors (Lee et al., 2002).

**2.1 Model Restrictions**

The main model restriction is the limiting current density $i_{lim}$, since operation above this limit affects the separation process, causing several inefficiencies (Strathmann, 2004). According to Ohm's law, the current density increases with the electric potential $E_{cell}$ and decreases with the sum of the resistances in the cell: membrane resistances $R^{am}$, $R^{cm}$ and solution resistances $R^{d}$, $R^{c}$. As the solution resistances are associated to their conductivities $\kappa^{c}$, $\kappa^{d}$, and cell thickness $h$ (Sadrzadeh et al., 2008), the current density is:

$$i_{cal} = \frac{E_{cell}}{R^{am} + R^{cm} + \frac{h}{\kappa^{c}} + \frac{h}{\kappa^{d}}} \tag{10}$$

Brauns et al., (2009) proposed an empirical equation for the limiting current density:

$$i_{lim} = sa\left(C_{s}^{d}\right)^{n} u^{b} \tag{11}$$

Where $s$ is a safety factor and $a$, $b$, $n$ are constants that are determined by measuring $i_{lim}$ at various velocities and concentrations of the diluted stream (Vargas, 2010).These constants depend on the solution and the geometric configuration in the ED system. Thus, concerning the limiting current density, the model restriction is expressed as:

$$i_{\mathrm{cal}} \leqslant i_{\mathrm{lim}} \tag{12}$$

## 3. Optimization

The objective function is the total desalination cost $C_T$ per cubic meter of water treated, expressed as the sum of the operational and investment costs $C_{op}$ and $C_{inv}$ :

$$min\,C_T = C_{op} + C_{inv} \tag{13}$$

In the present study the investment cost is restricted to the membrane costs, only. This simplification is valid since this is the only investment item that is expected to change significantly with operating conditions. $C_{inv}$ is defined as (Nikonenko et al., 1999):

$$C_{inv} = C_m \frac{A_{efT}\left\lfloor n_{rep} + 1 \right\rfloor}{Q_p t_{year} t_{max}} \tag{14}$$

Where $C_m$ is the membrane cost per unit area, $n_{rep}$ is the number of membrane replacements during $t_{year}$, $Q_p$ is the production rate, $t_{max}$ is the number of years of operation of the ED system and $A_{efT}$ is the total effective membrane area as a function of the number of cell pairs per stage, $N$, and the number stages, $N_s$:

$$A_{efT} = 2\,w\,N \sum_{i=1}^{N_s} L_s \tag{15}$$

Where:

$$N = \frac{Q_p}{hwu\alpha} \tag{16}$$

The operational cost $C_{op}$ is related to the energy costs for pumping and cell current:

$$C_{op} = C_{en}\frac{EI}{Q} + C_{en}\sum \frac{H_{Bombi} Q_{bi}}{\eta_i} \qquad i = d, c, rec \tag{17}$$

Where $C_{en}$ is the energy cost per kWh, $E$ is the total electric potential, $I$ is the electric current, $Q$ is the total flow rate, $H_{Bomb}$ is the pump head, $\eta$ is the pump efficiency, and $Q_b$ is the diluted, concentrated or recycled stream flow rate. The optimization procedure (Fig 2) is illustrated for the set of parameters and process variables listed in Table 1:

*Table 1: Simulation conditions for NaCl, KCl, or $Na_2SO_4$ desalination.*

| Parameter | Unit | Value | Parameter | Unit | Value | Parameter | Unit | Value |
|---|---|---|---|---|---|---|---|---|
| Rec | | 0 | $C_{en}$ | US\$ kWh$^{-1}$ | 0.16 | $w$ | m | 0.42 |
| $Q_p$ | m$^3$ day$^{-1}$ | 350 | $h$ | mm | 6.5 | $u$ | m s$^{-1}$ | 0.075 |
| $t_{ano}$ | day | 330 | $L_s$ | m | 0.725 | $\alpha$ | | 0.8 |
| $C^d_{s0}$ | keq m$^{-3}$ | 0.058 | $s$ | | 0.9 | $\beta$ | | 0.7 |
| $C^d_{sext}$ | keq m$^{-3}$ | 0.006 | $t_{max}$ | Year | 5 | $\eta$ | | 0.6 |
| $C^c_{s0}$ | keq m$^{-3}$ | 0.163 | $n_{rep}$ | | 0 | *a (for NaCl)* | | 4792 |
| $R^m$ | Ω m$^2$ | 0.007 | □ | | 0.9 | *b(for NaCl)* | | 0.025 |
| $C_m$ | US\$ m$^{-2}$ | 199.5 | F | C kmol$^{-1}$ | 96485339.9 | *n(for NaCl)* | | 0.92 |

## 4. Results

The optimization was made for producing desalinated water with concentration below $C^d_{sext}$. Table 2 shows the results for each salt. As expected, it is more expensive to remove $Na_2SO_4$ than KCl or NaCl, since $Na_2SO_4$ is a bivalent salt and demands more energy per removed mole. The energy difference is compensated in the optimization algorithm by an increase in the membrane area, affecting the investment cost, because this solution is more favourable than to increase the electric current.

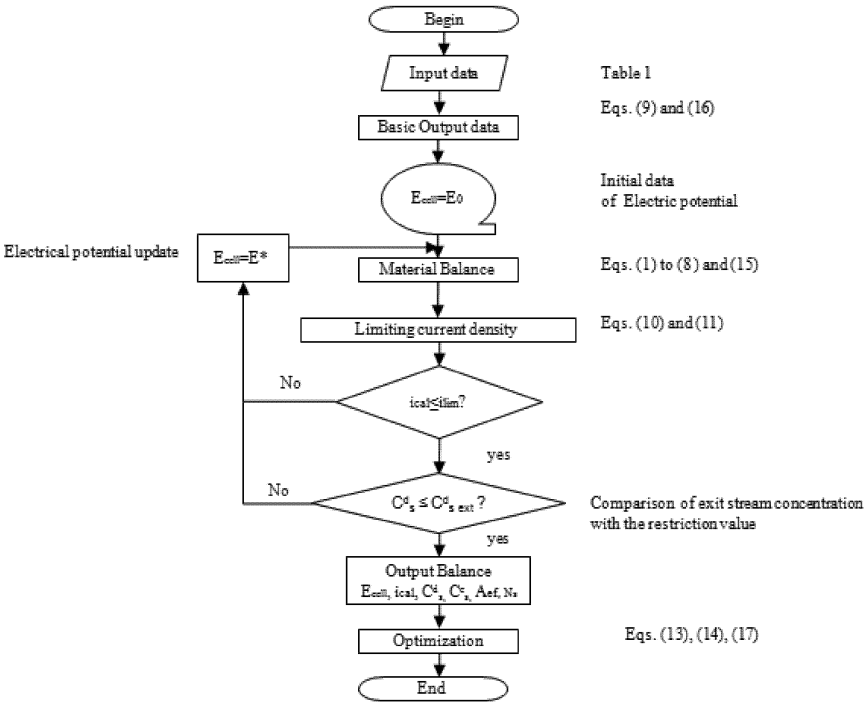


*Figure 2: Calculation procedure for the electrodialysis process model.*

*Table 2: Optimization results for NaCl, KCl, or $Na_2SO_4$ separation in the ED system*

| Salt | $E_{cell}$ (V) | $A_{efT}$ ($m^2$) | $N_s$ | $C_{inv}$ (US\$ $m^{-3}$) | $C_{op}$ (US\$$m^{-3}$) | $C_T$ (US\$$m^{-3}$) |
|---|---|---|---|---|---|---|
| NaCl | 0.584 | 1203.4 | 8 | 0.41 | 0.18 | 0.59 |
| KCl | 0.403 | 1654.6 | 11 | 0.55 | 0.15 | 0.70 |
| $Na_2SO_4$ | 0.359 | 2105.9 | 14 | 0.73 | 0.15 | 0.88 |

Figure 3 shows the effect of the recycle ratio on the total cost. When the recycle ratio is increased, the total membrane area decreases and the investment cost decreases, too. A minimum is attained for this cost at a recycle ratio value of ca. 0.65. Larger values of the recycle ratio cause an increase of the total cost due to the larger energy consumed by pumping, in spite of the decrease of electrical potential so as to satisfy the restriction of the limiting current density. To compensate for this effect, the membrane area must be increased, thus increasing the investment cost.

Figure 4 shows that the increase in the cell thickness causes a decrease in the minimum investment cost for a given flow rate. This is a consequence of the larger cell volume, and larger residence time, which corresponds to less membrane area.

This is associated with an increase in operation cost due to the increase in energy consumption corresponding to the lower salt concentration, which causes a decrease in the conductivity. In practice the cell thickness is limited by spacers available in the market. The results indicate that the recycle ratio has a higher effect on the total costs than the cell thickness.

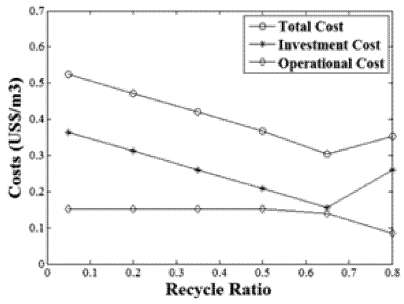


*Figure 3: Recycle ratio effect on the total cost*

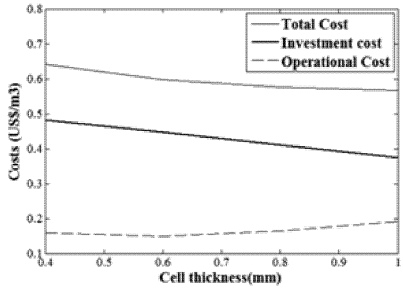


*Figure 4: Cell thickness effect on the total cost*

In this case, an increase of the recycle ratio from 0 to 0.65 decreases the total cost in US$0.29/m3, whereas a change in the cell thickness of 0.4 mm only decreases the cost in US$0.06/m3.

## 5. Conclusions

The results obtained with the proposed algorithm for the optimized design of continuous multistage ED systems are coherent with reported observations. With the optimization it was possible to observe the effects of the process variables analyzed. For instance, it was found that the increase in the recycle ratio up to a certain level reduces significantly the total cost in the system. The method can be adapted to specific conditions and used as a design tool for ED systems.

## Acknowledgements

The authors thank the Brazilian federal agency CNPq for the financial support.

## References

Brauns, E. et al., 2009, On the experimental verification of an electrodialysis simulation model for optimal stack configuration design through solver software, Desalination. Elsevier, Amsterdam, 249, 3, 1030-1038.

Horvath, A. L. 1985, Handbook of aqueous electrolyte solutions : physical properties, estimation and correlation methods, Ellis Horwood, New York.

Lee, H. J. et al., 2002, Designing of an electrodialysis desalination plant, Desalination. Elsevier, Amsterdam, 142, 3, 267-286.

Nikonenko, V. V. et al., 1999, Analysis of electrodialysis water desalination costs by convective-diffusion model, Desalination. Elsevier, Amsterdam, 126, 1-3, 207-211

Sadrzadeh, M. et al., 2008, Separation of lead ions from wastewater using electrodialysis: Comparing mathematical and neural network modeling, Chemical Engineering Journal, 144, 3, 431-441.

Strathmann, H., 2004, Ion-exchange membrane separation proceses, Elsevier, Amsterdam, 360.

Vargas, A., 2010, Modelagem e Otimização de Sistemas de eletrodiálise, Dissetação de Mestrado. Engenharia Química. Escola Politécnica da Universidade da São Paulo, 88 (in Portuguese)